11.09.2018

MHTN
ARCHITECTS

BD Medical Beehive Project Design Narrative

MHTN Project Number: 2018559

Table of Contents

1. Architectural Narrative
    a. Existing Floor plan
    b. Proposed Floor Plan
2. Mechanical/Plumbing Narrative
3. Electrical Narrative
4. Appendix A: Architectural supporting documents
5. Appendix B: Mechanical/Plumbing supporting documents

Architectural Narrative

This project consists of the expansion of Cleanroom #7. It requires the relocation of the ACM Department and the current manufacturing equipment in Cleanroom #7. Upon completion of the expanded Cleanroom, production equipment will need to be installed. Some sections of equipment are so large that their delivery to the cleanroom will require temporary demolition in some areas along the Equipment Delivery Path. Additionally, some structural openings along the Equipment Delivery Path will need to be enlarged. Some sections of equipment are so tall that they require ceiling heights that will require a section of the cleanroom to have new ceilings placed at the underside of structural framing. Additionally, it may be necessary to modify the roof framing in a small area to accommodate said equipment.

Equipment Delivery Path:

Selective Demolition Equipment Delivery Path:

1. As required, temporarily relocate Lockers to location determined by Owner. Replace as requested by Owner.
2. As required, temporarily move or remove electrical, mechanical, or plumbing elements. Replace as requested by Owner.
3. As required, enlarge structural openings in masonry walls. Reinforce structurally.
4. As required, demolish non-structural partitions and ceilings within the equipment path. Replace all demolished walls and ceilings, repair, patch, and paint to match existing.
5. As required, temporarily move or remove warehouse racking. Replace as requested by Owner.

420 East South Temple, Suite 100, Salt Lake City, Utah 84111 / P 801.595.6700 / F 801.595.6717 / www.mhtn.com

Demolition:

Selective Demolition ACM Office/Cleanroom #7:

1. Provide a temporary partition between the operating areas adjacent to Cleanroom #7 and the existing ACM Office. This partition shall enable demolition to proceed without inhibiting operations within or egress from the operating areas.
2. All fixtures, cabinets, flooring, ceiling, etc. shall be removed from this space. Consult with Owner on the issue of salvaging.
3. Existing partition walls constructed from modular demountable components within the ACM Office area will be deconstructed, sorted, and preserved for reuse. Return the wall components to the Owner. Properly dispose of any wall components the Owner does not want to keep.
4. Existing partition walls not constructed from modular demountable components within the ACM Office area will be demolished.
5. Existing ceilings within the ACM Office area will be demolished.
6. The existing walls shall be patched and prepared for new paint. New openings in existing walls shall be reinforced structurally.
7. The existing flooring will be removed and made ready for the installation of the new flooring. A moisture test will be required for all areas to receive the new double broadcast flooring.
8. In the selected high clearance area selective demolition will be needed to provide engineered modifications to roof framing to accommodate pieces of equipment with minimal disruption to operating rooftop equipment. Temporarily shore all roofing supports while framing modifications are taking place.
9. Patch and repair roofing materials as needed.
10. Relocate ducts, sprinkler piping, other piping, conduit, and any other obstructions from selected high clearance area.
11. Consult the mechanical and electrical narratives for demolition related to their scope of design.

New Construction:

Beehive expansion - Cleanroom #7:

1. Provide ⅝ plywood wainscot from floor level to 48” A.F.F. to match existing. Cover with vinyl wall covering to match existing to 54” A.F.F.
2. After moisture testing the exposed concrete slab, prepare floors to receive the new double broadcast flooring. Do not install until the moisture testing has been completed and it meets the manufacturer’s recommendations. See attached cut sheet for floor specifications.
3. Patch and repair walls and ceilings for the application of new epoxy paint. Treat penetrations per the descriptions by the electrical and mechanical engineers.
4. After flooring has cured provide and install 6” rubber base at perimeter of new flooring. Color to match existing.

5. Install new lay-in ceiling in the expanded Cleanroom area. Tie into existing system where possible. Provide raised Ceiling as required for manufacturing equipment clearances.
6. Provide an aluminum sliding entrance sufficiently large for the installation of large sections of construction equipment. Min. size 12'-0" x 8'-0" four panel door. Bottom track must be removable so that heavy equipment on casters may roll through the opening.
7. Provide a new engineered structural opening in the masonry wall between the Cleanroom and the gowning room to the West. This opening is for the air shower shown below.
8. Provide and install a new air shower assembly in location shown on the floor plan provided. These will be turnkey units by Clean Air Products, model CAP701KD-ST (see attached cut sheet). Any substitutions will need to be approved by the owner. Units will require a fire sprinkler connection.
9. Provide plastic curtain separating production and boxing areas as required.
10. Provide 3 5/8" metal stud @ 16" O.C. bulkhead walls with 5/8" gyp board with epoxy paint as shown to create high clearance area for equipment.
11. Patch and repair roof insulation in high clearance area and provide a 5/8" gyp board ceiling attached to the underside of roof framing.
12. Provide small areas of extended ceiling height in the high clearance area with the roof joist by modifying the framing and roof sheathing to accommodate small areas that will allow operation and maintenance of the tallest pieces of equipment. Insulate and finish with 5/8" gyp board with epoxy paint.
13. Consult the mechanical and electrical narratives for construction related to their scope of design.

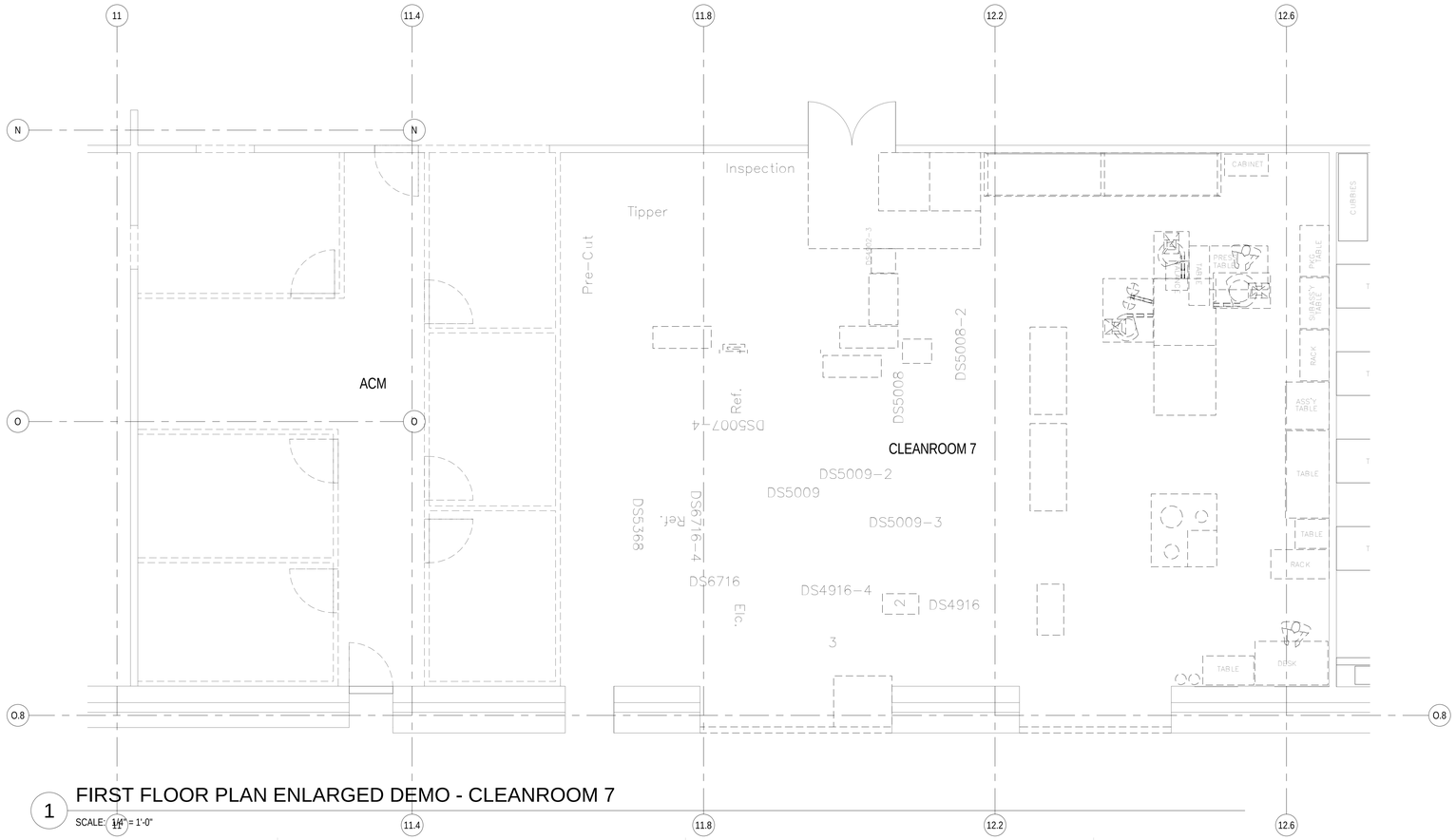

1 FIRST FLOOR PLAN ENLARGED DEMO - CLEANROOM 7

SCALE: 1/4" = 1'-0"

KEYPLAN

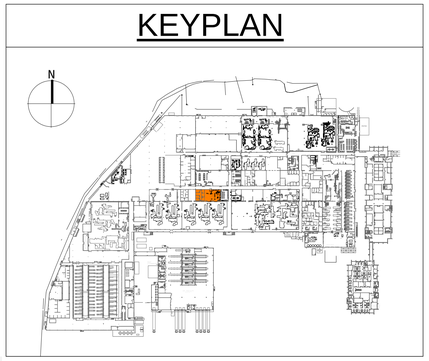

MHTN
ARCHITECTS

MHTN Architects, Inc.
420 East South Temple
Suite 100
Salt Lake City, Utah 84111
Telephone (801) 595-6700
Telefax (801) 595-6717
www.mhtn.com

BD MEDICAL
BEEHIVE REMODEL
SANDY, UTAH

©2018 MHTN ARCHITECTS, INC.

Confidentiality Notice:
This document is intended for use on the Project identified herein by individuals and companies involved in the design, permitting, bidding and construction of the Project. MHTN Architects, Inc. grants limited rights to distribute and reproduce this document for this express purpose only. Distribution, printing or copying this document for purposes other than those indicated is strictly prohibited. If a digital copy of this document is received in error, please delete it.

SEAL

CONCEPT SKETCH - NOT FOR CONSTRUCTION

MHTN PROJECT NO. 2018560

Original drawing is 30 x 42. Do not scale contents of this drawing.

REVISIONS
CONTRACTOR TO VERIFY DRAWINGS IN FIELD USE REFLECT LAST REVISION DATE:

NO. △	DATE	DESCRIPTION

ISSUE
STATUS
ISSUE DATE

SHEET NAME
DEMOLITION PLAN - CLEANROOM 7

SHEET NUMBER
AD101

L:\Commercial\2018559 BD Medical Beehive Project\BP Drawings\BD Beehive.rvt
11/9/2018 2:05:40 PM

KEYNOTES

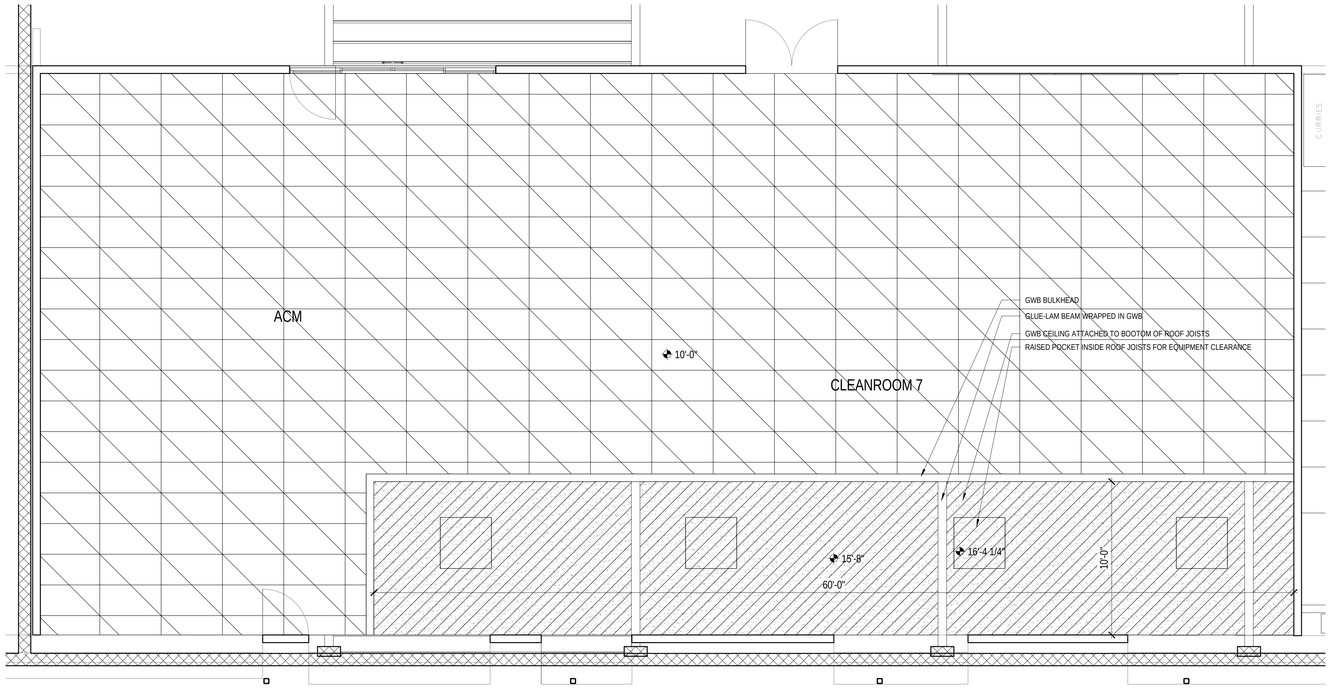

2 FIRST FLOOR REFLECTED CEILING PLAN

SCALE: 1/4" = 1'-0"

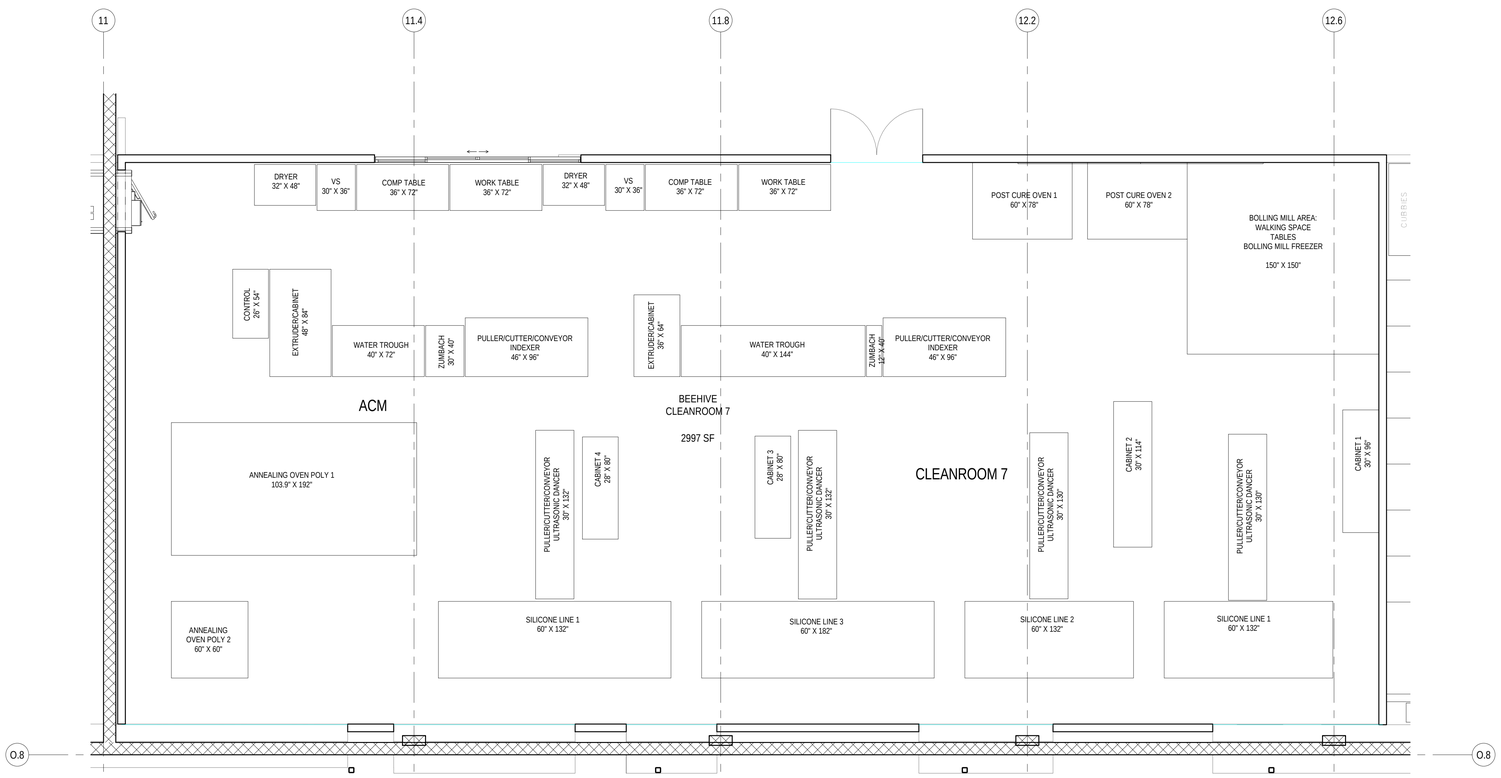

1 FIRST FLOOR PLAN ENLARGED - CLEANROOM 7

SCALE: 1/4" = 1'-0"

KEYPLAN

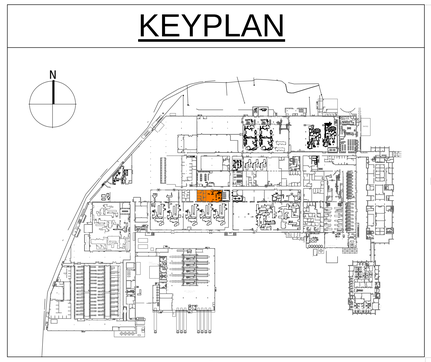

MHTN ARCHITECTS

MHTN Architects, Inc.
420 East South Temple
Suite 100
Salt Lake City, Utah 84111
Telephone (801) 595-6700
Telefax (801) 595-6717
www.mhtn.com

CONSULTANTS, INC.
Address
Suite 100
City, State 12345
Telephone (123) 456-7890
Telefax (123) 456-7890
www.consultant.com

BD MEDICAL
BEEHIVE REMODEL
SANDY, UTAH

©2018 MHTN ARCHITECTS, INC.

Confidentiality Notice:
This document is intended for use on the Project identified herein by individuals and companies involved in the design, permitting, bidding and construction of the Project. MHTN Architects, Inc. grants limited rights to distribute and reproduce this document for this express purpose only. Distribution, printing or copying this document for purposes other than those indicated is strictly prohibited. If a digital copy of this document is received in error, please delete it.

SEAL

CONCEPT SKETCH - NOT FOR CONSTRUCTION

MHTN PROJECT NO. 2018560

Original drawing is 30 x 42. Do not scale contents of this drawing.

REVISIONS
CONTRACTOR TO VERIFY DRAWINGS IN FIELD USE REFLECT LAST REVISION DATE.

NO.	DATE	DESCRIPTION

ISSUE
STATUS
ISSUE DATE

SHEET NAME
CLEANROOM 7 PLAN

SHEET NUMBER
A101

L:\Commercial\2018559 BD Medical Beehive Project\BP Drawings\BD Beehive.rvt
11/9/2018 2:05:30 PM

Mechanical Engineering Narrative
November 9, 2018

Cleanroom 7 'Beehive' Processing Area
Facility Mechanical Requirements

for

BD Medical
9450 So. State Street
Sandy, Utah 84070

Project Mechanical Summary:

Clean room 7 (Beehive) shall be remodeled and expanded to the west in place of the existing ACM offices to provide the required area for new process equipment. Demolition and repair of existing systems will occur as needed. The cleanroom HVAC equipment will be modified to the space and new materials provided to meet standards. New utilities shall be run to the new process equipment.

Applicable Codes and Standards:

Mechanical, plumbing, and fire sprinklers shall be designed and installed per the current state and local codes including: 2015 IBC, 2015 IMC, 2015 IPC, 2015 IFCG,, 2015 IFC, 2015 IECC (or 2013 ASHRAE 90.1), and NFPA 70 (2014 NEC). Sheet metal SMACNA standard.

Scope of Work:

1. Demolition of existing systems
2. HVAC Equipment modifications
3. Air distribution systems
4. Exhaust and venting systems
5. Chilled water pump & piping systems
6. Heat exchanger
7. Plumbing systems
8. Emergency shower
9. Water heater (for em shower)
10. Domestic water piping
11. De-ionized water piping
12. Waste & vent piping
13. Compressed air piping
14. Process vacuum piping
15. Insulation systems
16. System commissioning
17. Testing
18. Balancing
19. Automatic control systems
20. Modification of fire sprinkler system

Coordination and Phasing:

Construction work for Cleanroom 7 (Beehive) shall be completed while the existing east portion of the cleanroom shall remain in operation. Minimal downtime shall occur under careful coordination for any necessary connections to equipment, piping, ductwork, controls, etc. within the boundaries of the operational part of the cleanroom.

Demolition:

Items for demolition shall be removed properly and completely from the site. The building owner shall have first right of refusal for any equipment or materials demolished. Removal shall be complete back to mains and panels or within walls or floors where not exposed, and all ends shall be capped or plugged with the finished surface repaired to match adjacent. Holes, depressions, and voids in building surfaces shall be repaired (including roofs).

Cleanroom 7 (Beehive) mechanical demolition shall include removal of all supply air ductwork back to the existing roof mounted air handling units, removal of all existing ceiling mounted diffusers, and removal of oven vents. Plumbing demolition is to include removal of compressed air branch lines to various locations on existing process equipment, removal of domestic water piping to one piece of existing process equipment, and saw-cutting floor for excavating approximately a 10 foot section of sanitary sewer piping.

HVAC Equipment Modification:

Two existing DX cooled air handling units serve the new area that will be cleanroom 7 (Beehive). One shall remain as-is. The other is to be retrofitted with a new filter section (with LUWA filters) and a bigger fan motor to account for the additional static pressure from the additional filters. The existing roof curb will need to be replaced or modified to allow for the additional filter section. The new supply and return air ductwork

Exhaust and venting systems:

Cleanroom 7 (Beehive) shall require venting to six items at the process equipment. Process venting shall be approximately 4" double wall stainless steel B-vent. Four items shall require exhaust at the ceiling over the process equipment combined into one roof mounted exhaust fan (approximately 600 CFM total). Two items shall require approximately 72" x 48" x 12" stainless steel hoods with individual stainless steel exhaust ductwork up to individual roof mounted exhaust fans.

(Typical Exhaust Hoods)

Air Distribution Systems:

New supply and return air ductwork shall be installed above ceilings. New ductwork shall be un-lined galvanized sheet metal constructed using SMACNA standards at 2" pressure class, leakage class 6 for rectangular ducts, and leakage class 3 for round ducts. All ducts are to be sealed to SMACNA seal class A, and all ducts are to be externally insulated.

Diffusers are to be radial vane type. Branch ducts shall be round with insulated flex duct connected to the diffusers and high efficiency take-offs with balancing dampers having locking quadrants with handles. Existing low return ductwork and grilles shall remain. New returns shall be ducted to just above the floor with heavy duty louvered sidewall grilles.

New Diffuser Type

New Grille Type

Chilled water pump, heat exchanger, and piping:

Chilled water needs shall be served from an existing plant chilled water primary system loop. A secondary loop shall be created to serve the requirements of each cleanroom. The secondary loop shall consist of a heat exchanger, two secondary pumps with VFDs (for redundancy), insulated schedule 40 black steel for mains, and insulated type L copper piping with soldered fittings for any branches. Each chilled water connection shall be fitted with a control valve, a balancing valve, pressure gauges, and thermometers. Cleanroom 7 (Beehive) requires seven chilled water connections.

The pumps and heat exchanger shall be located on the mezzanine above cleanroom 11 (no further than 220 feet to the north and 110 ft to the west). The heat exchanger shall be a plate and frame type and the pumps shall be base mounted type if possible. Piping sizes shall be 2" and smaller. Anticipated pump flow is 35 GPM.

Should the roof need to be raised in the area of the Silicone lines, there is a possibility that two, roof mounted, 8" chilled water lines shall be re-routed for approximately 80 ft and adding about 20 ft of piping for each line. This shall not be considered unless further information deems it necessary.

Plumbing systems:

In cleanroom 7 (Beehive) a damaged sanitary sewer line shall be repaired (below floor), domestic water shall be run from an existing source and connected to one piece of equipment, de-ionized water shall run from new equipment and be connected to four pieces of equipment, and compressed air shall run from existing plant air to seven pieces of equipment. Compressed air is currently available above the room with branch lines extending no more than 40 ft. Cold water is available at the west end of the space. Hot water is available approximately 50 ft east and 50 ft north of the space.

The de-ionized water shall be a new system provided by the mechanical for this cleanroom. It shall be a complete system capable of delivering 11 GPM. This equipment will reside on the mezzanine above Cleanroom 11 (no further than 220 feet to the north and 110 ft to the west).

(Sample DI Water System)

Piping:

Piping materials shall be as follows:

- Domestic water piping shall be Type L copper with soldered copper fittings.
- De-ionized water piping shall be schedule 40, ANSI B16.9, 316L Stainless steel, welded.
- Waste piping below grade shall be cast iron with MG couplings. Waste & Vent piping above grade shall be cast iron with no-hub 4-band fittings for 2" and larger. Galvanized schedule 40 steel with threaded fittings for 1-1/2" and smaller.
- Compressed air piping shall be Type M copper with soldered copper fittings.
- Chilled water piping shall be Schedule 40 black steel for mains and type L copper with soldered copper fittings for branch piping.
- Valves shall be full port.
- All piping shall be identified with fluid name and directional arrows.

Insulation:

Ductwork wrap insulation shall be with foil faced, 2" thick, 0.75 lb/cu ft density, fiberglass.

Piping insulation shall be installed on all domestic hot and cold water piping and on chilled water piping. Piping insulation shall be 1" thick fiberglass with all service jacket.

System Commissioning, Testing, and Balancing:

All systems are to be commissioned prior to balancing. Systems are to be checked for power, motor rotation, damper position, control verification, piping connections, vibration isolation, etc.. A commissioning report shall be completed.

All ductwork shall be tested for leakage. All piping shall be pressure tested. Reports shall be completed.

Air system terminations and overall air delivery from air handling units are to be balanced. Chilled water systems are to be balanced at all points of connection, at pump, and at primary side of heat exchanger. A balancing report is to be completed.

Automatic Controls:

The existing BAC automatic control system shall be used. New components, wiring, conduit, and programming with graphics shall be incorporated into the existing system. New automatic controls shall include but not be limited to:

- The new filter section of the applicable air handler in cleanroom 7 (Beehive).
- The chilled water secondary system.

Up to two temperature sensors will need to be moved in their respective spaces.

Space static pressure and filter differential pressure shall be added to two cleanroom air handling units with digital display being located within the space served.

Chilled water systems shall need eight pipe mounted water temperature sensors. Fluid temperature shall be monitored at entering water and leaving water for each side of the heat exchanger and at each equipment connection point.

Fire Sprinkler Systems:

Existing pendant heads with white escutcheons shall be removed along with any needed branch piping.

New concealed heads with white covers shall be installed in all new areas. New piping shall be schedule 40 black steel and shall be installed where head locations require adjustment for new ceiling grids.

End of Narrative

BD Medical
Clean Room 7 (BeeHive) Remodel
Scope of Electrical Work

Codes **and** Standards

ADA
Americans with Disabilities ACT

EIA/TIA
Electronics Industries Association/Telecommunications Industry Association

IBC
International Building Code

IESNA
Illuminating Engineering Society of North America

NFPA 70
National Fire Protection Association, National Electrical Code

NFPA 72
National Fire Alarm Code (International Fire Code).

IFC
International Fire Code

IEC
International Energy Conservation Code

NFPA 101
Life Safety Code

Demolition-Relocation

Cleanroom 7 (BeeHive)

1. Remove the existing light fixtures in the ACM Offices and Cleanroom 7. Return the fixtures to the Owner. Properly dispose of any fixtures the Owner does not want to keep
2. Remove outlets in the ACM Office walls that will be removed. Remove associated conduit and conductors back to the source.
3. Disconnect the existing equipment in existing Cleanroom 7. Remove associated conduit and conductors back to the source.
4. Disconnect the RTU temporarily and reconnect once new roof curb has been installed. Relocate the associated feeders as required.

Electrical Systems Program (by space)

Electrical Distribution

1. Distribution and branch panels for this project shall be furnished under a separate project. They will consist of a 480/277V distribution section and a 240V and 120/208V distribution panels installed in an integrated distribution switchboard in the Janitors Closet and Electrical Room east of the project area and adjacent to the Corridor.
2. Minimum ¾" conduit for all electrical circuits. MC cable can be utilized to feed light fixtures with a maximum of 6' length. MC cable can also be used for outlets inside hallow stud partitions except for home runs and room interconnecting runs which shall be run in EMT.

Expanded Cleanroom 7 (BeeHive)

1. Provide drops to the following equipment zones:
    - Annealing Oven Poly 1; 240V, 3 phase, 39A Load. Provide 50A circuit breaker, 3 #8 THHN CU, 1 #8 THHN CU GND, in a ¾" conduit.
    - Annealing Oven Poly 2; 480V, 3 phase, 70A Load. Provide 90A circuit breaker, 3 #3 THHN CU, 1 #8 THHN CU GND. in a 1" conduit.
    - Poly line 1; 230V, 3 phase, 41A Load. Provide 60A circuit breaker, 3 #6 THHN CU, 1 #10 THHN CU GND. in a 1" conduit.
    - Poly Line 2 Leg 1; 480V, 3 phase, 35A Load. Provide 50A circuit breaker, 3 #8 THHN CU, 1 #8 THHN CU GND, in a ¾" conduit.
    - Poly Line 2; 480V, 3 phase, 54A Load. Provide 70A circuit breaker, 3 #4 THHN CU, 1 #8 THHN CU GND. in a 1" conduit.
    - Bolling Mill; 480V, 3 phase, 30A Load. Provide 40A circuit breaker, 3 #8 THHN CU, 1 #10 THHN CU GND, in a ¾" conduit.
    - Silicone Line 1 480V, 3 phase, 19A Load. Provide 25A circuit breaker, 3 #10 THHN CU, 1 #10 THHN CU GND, in a ¾" conduit.
    - Puller Cutter Line 1, 480V, 3 phase, 20A Load. Provide 25A circuit breaker, 3 #10 THHN CU, 1 #10 THHN CU GND, in a ¾" conduit
    - Bump Oven, 208V, 1 phase, 20A Load. Provide 25A circuit breaker, 3 #10 THHN CU, 1 #10 THHN CU GND, in a ¾" conduit.
    - Silicone Line 2; 480V, 3 phase, 24A Load. Provide 30A circuit breaker, 3 #10 THHN CU, 1 #10 THHN CU GND, in a ¾" conduit.
    - Puller Cutter Line 2, 480V, 3 phase, 20A Load. Provide 25A circuit breaker, 3 #10 THHN CU, 1 #10 THHN CU GND, in a ¾" conduit.
    - Silicone Line 3; 480V, 3 phase, 51A Load. Provide 70A circuit breaker, 3 #4 THHN CU, 1 #8 THHN CU GND. in a 1" conduit.
    - Puller Cutter Line 3, 480V, 3 phase, 20A Load. Provide 25A circuit breaker, 3 #10 THHN CU, 1 #10 THHN CU GND, in a ¾" conduit
    - Future Silicone Line 4; 480V, 3 phase, 51A Load. Provide 70A circuit breaker, 3 #4 THHN CU, 1 #8 THHN CU GND. in a 1" conduit. Provide circuit to a j-box located above the ceiling. Final connect will be by others.
    - Future Puller Cutter Line 4, 480V, 3 phase, 20A Load. Provide 25A circuit

breaker, 3 #10 THHN CU, 1 #10 THHN CU GND, in a ¾" conduit. Provide circuit to a j-box located above the ceiling. Final connect will be by others.

- Post Cure Oven 1; 480V, 3 phase, 30A Load. Provide 40A circuit breaker, 3 #8 THHN CU, 1 #10 THHN CU GND, in a ¾" conduit.
- Post Cure Oven 2; 208V, 3 phase, 50A Load. Provide 75A circuit breaker, 3 #4 THHN CU, 1 #8 THHN CU GND. in a 1" conduit.
- Burn Off Oven; 480V, 3 phase, 16A Load. Provide 20A circuit breaker, 3 #12 THHN CU, 1 #12 THHN CU GND. in a 3/4" conduit.
- DI Water System; 208V, 3 phase, 20 Load. Provide 25 circuit breaker, 3 #10 THHN CU, 1 #10 THHN CU GND, in a ¾" conduit. This system may not be located in the cleanroom but in a separate part of the plant. Location to be determined.
- Chilled Water Pump, 480V, 3 phase, 2.5A Load. Provide 20A circuit breaker, 30A disconnect with factor installed electrical interlock back to VFD that is provided by Mechanical and wired by Electrical.

2. Provide minimum of 6 duplex convenience outlets on the ceiling for future inspection station power supply. Provide a minimum of (2) 120V, 20A circuits for these outlets. These outlets shall be tied to the new 208/120V panel.
3. Provide 7A, 480V, 3 phase power to the two new air shower doors. Tie to a 20A, 3 pole circuit 480/277V panel.
4. Provide 208V, 3 phase power to the new role up door. Tie to the 208/120V panel.
5. Provide minimum of 2 duplex convenience outlets on each exterior wall of the room (roughly 25'-0" on center), final location to be determined during design. Tie two outlets to a dedicated 20A, 120V circuit in the nearest 208/120V emergency panel. Tie the rest of the outlets to two 20A, 120V circuits in the 208/120V normal panel 5DP011W. Divide the outlets equally between the circuits.
6. Provide 2' x 4' 50W 5000 Lumen LED light fixtures at 8'-0" on center spacing. (see attached cut sheet). Tie to the 277V circuit through a new toggle switches in zoned (A, B) scheme.
7. One voice data outlet shall be roughed in at each (6) inspection tables. One voice data outlet shall be roughed in in the exterior walls of the cleanroom at approximately 25'-0" on center. One 1" conduit will be extended from each voice/data outlet to the nearest cable tray. Horizontal cable, and terminations shall be by the Owner.
8. Detection will be accomplished by installation of heat and smoke detectors. New horn/strobes shall be provided in ceiling or wall. Provide pull stations at the main exits to the cleanroom and mezzanine spaces. New detector and horn/strobe locations shall be per NFPA 72. New devices shall be tied to the existing Simplex fire alarm system and shall match existing.
9. Furnish and install 8" speaker back box, (1) for every 288 sq. ft. Run a ½" conduit between the back boxes. Speakers and wiring to Owner's paging system will be by the IT Dept.

Decorative Quartz (Double Broadcast) System

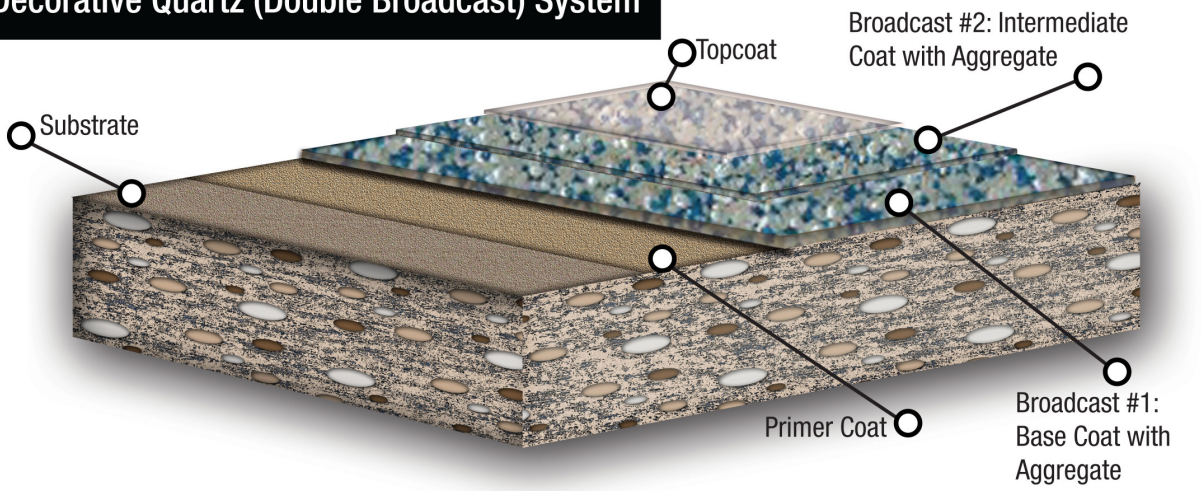

Decorative Quartz Double Broadcast System is a decorative, multi-lift, high strength concrete resurfacing system. It is used for environments requiring an attractive, high performance floor or when a concrete floor has sustained damage requiring a textured 1/8" surface restoration.

The system described is our standard system, we have several other product options that also work for this system including, but not limited to low odor or low VOC products. Consult your sales representative for details.

BENEFITS

- Delivers a range of texture variations depending on thickness or number of grout coats
- Great physical strengths
- Highly chemical resistant
- Excellent wear characteristics
- Specially blended colored aggregates create a variety of decorative colored looks
- Gardner 1 (clear) epoxies available
- Typical application of approximately 1/8"

RECOMMENDED FOR

- Laboratories
- Pharmaceutical manufacturing
- Commercial areas
- Restrooms and locker rooms
- Schools
- Animal care areas
- Kitchens
- Anywhere an aesthetic concrete re-surfacer is required

*Refer to individual data sheets for preparation, mixing and application instructions as well as product limitations, limitations to liability, warranty information, and common chemical resistance information.

We also have available several crack fillers, joint sealants, and other support products. Please inquire with your sales representative for more information on these products.

*See individual component product data sheets for specific product properties.

SYSTEM COMPONENTS (approx 1/8th")

Coat	Product	Mix	Coverage
Primer	Epox-O-Sheen	4:1	267 sf/gallon
Base Intermediate Coat	Epox-O-Sheen 100C	2:1	90-160 sf/gallon
Aggregate (2 lifts)	Quartz Blend	Per Application: 0.5 – 0.7 lbs/ sq. ft.	
Top	Ure-Sheen	2:1	320-500 sf/gallon

Multiple Options Available

PHYSICAL PROPERTIES		
Property	Test Method	Result
Adhesion		425 psi (concrete failure)
Flexural Strength	ASTM D790	7,400 psi
Compressive Strength	ASTM D695	11,200 psi
Tensile Strength	ASTM D638	psi
Elongation		4.1%
Impact Resistance		60 inch lbs. direct
Abrasion Resistance	CS-17 1000/500	22-36 mg
Gloss	Erichson Glossmeter	>70
Application Temperature		55° to 90° F

Copyright Paul M. Wolff Co. * 460 N. Geneva Road * Lindon, UT 84042
Phone: 801.785.3336 Online: www.paulwolff.com

Paul M. Wolff Co.

Decorative Quartz Double Broadcast System Application and Mixing Instructions

PRODUCT STORAGE: Store product in an area so as to bring the material to normal room temperature before using. Continuous storage should be between 60 and 90 degree F. Keep from freezing.

SURFACE PREPARATION: Surface preparation will vary according to the type of complete system to be applied.. For a complete system build higher than 10 mils dry, we recommend a fine brush blast (shot blast). All dirt, oil, dust, foreign contaminants and laitance must be removed to assure a trouble free bond to the substrate. A test should be made to determine that the concrete has an appropriate vapor barrier. This can be done by placing a 4'X4' plastic sheet on the substrate and taping down the edges. If after 24 hours, the substrate is still dry below the plastic sheet, then the substrate does not show signs of eventual hydrostatic pressure problems that may later cause disbanding. However, the primer can be applied to a damp floor as long as there are not standing puddles.

PRIMER MIXING: This product comes pre-packaged by weight. Kits should be mixed in their entirety. If partial kits are to be used, refer to the front of this technical data for proper weight mix ratios. After the two parts are combined, mixes well with slow speed mixing equipment such as a jiffy mixer until the material is thoroughly mixed and streak free. This product is an emulsion product and should be mixed well before using.

PRIMER APPLICATION: The mixed material can be applied by brush or roller. Maintain temperatures within the recommended ranges during the application and curing process. Apply material with relative humidity within the parameters shown on the technical data. When the end of the pot life has been reached, you will find that the material becomes hard to apply and will actually tend to roll back up onto the roller. Do not try to continue application when the coating has reached this step. Applications made at different times with differing environmental conditions, may show slight variations in gloss.

TOPCOATING THE PRIMER: When you topcoat the primer, you must first be sure that all of the solvents and water have evaporated from the coating during the curing process. The information on the front side of the individual data sheet are reliable guidelines to follow. However, it is best to test the coating before recoating or topcoating. This can be done by pressing on the coating with your thumb to verify that no fingerprint impression is left. If no impression is created, then the recoat or topcoat can be started. Always remember that colder temperatures will require more cure time for the product before topcoating can commence. Before topcoating, check the coating to insure no epoxy blushes were developed (a whitish, greasy film or deglossing). If a blush is present, it must be removed prior to topcoating or recoating. A standard type detergent cleaner can be used to remove any blush.

PRIMER CLEANUP: Use PM solvent

BODY COAT MIXING: This product has a mix ratio of 9.0# part A to 4.15# part B. Standard packages are in pre-measured kits and should be mixed as supplied in the kit. We highly recommend that the kits not be broken down unless suitable weighing equipment is available. After the two parts are combined, mix well with slow speed mixing equipment such as a jiffy mixer until the material is thoroughly mixed and streak free. After mixing, transfer the mixed material to another pail (the transfer pail) and again remix. The material in the transfer pail is now ready to be applied on the primed substrate. Improper mixing may result in product failure.

BODY COAT & BROADCAST APPLICATION: The mixed material can be applied by brush or roller. However, the material can also be applied by a suitable serrated squeegee and then back rolled as long as the appropriate thickness recommendations are maintained. Maintain temperatures and relative humidity within the recommended ranges during the application and curing process. If concrete conditions or over aggressive mixing causes air entrapment, then an air release roller tool should be used prior to the coating tacking off to remove the air entrapped in the coating. While the applied material is still wet, broadcast the appropriate colored sand by hand in an upward motion until the sand is applied to excess. Do not throw the sand downward, as this might cause uneven ridges to form. After the product has cured, remove excess and loose colored quartz by a broom or with a vacuum.

BODY COAT CLEANUP: Use xylol.

2ND BODY COAT & BROADCAST APPLICATION:
Repeat the body coat and broadcast application and allow to cure before topping with the grout coat.

GROUT COAT MIXING: This product has a mix ratio of 9.0# part A to 4.15# part B. Standard packages are in pre-measured kits and should be mixed as supplied. We recommend that the kits not be broken down unless suitable weighing equipment is available. After the two parts are combined, mix well with slow speed mixing equipment such as a jiffy mixer until the material is thoroughly mixed and streak free. After mixing, transfer the mixed material to another pail (the transfer pail) and again remix. The material in the transfer pail is now ready to be applied on the double broadcast application. Improper mixing may result in product failure.

GROUT COAT APPLICATION: The grout coat application will determine the texture of the overall system applied. For a more textured system, apply less liquids. For a smoother system application, apply a heavier build of the grout coat liquids.. The mixed material can be applied by brush or roller. However, the material can also be applied by a suitable serrated or flat squeegee and then back rolled as long as the appropriate thickness is accomplished. Maintain temperatures and relative humidity within the recommended ranges during the application and curing process. If concrete conditions or over aggressive mixing causes air entrapment, then an air release roller tool should be used prior to the coating tacking off to remove the air entrapped in the coating.

OPTIONAL WEAR COAT:
After the grout coat application has cured, an optional urethane topcoat can be applied. This product has a two to one mix ratio by volume- (two gallons of part A with 1 gallon part B) (volumes approximate). After the two parts are combined, mix well with slow speed mixing equipment such as a jiffy mixer until the material is thoroughly mixed and streak free. Avoid whipping air into the coating. Improper mixing may result in product failure. After mixing, the mixed material can be applied by brush or roller. Maintain temperatures within the recommended ranges during the application and curing process. It is best to maintain a wet edge to avoid roller marks. Too thick of an application may result in product failure. Exposure to certain types of lights such as sodium lights may cause the product to discolor. Read individual Technical data sheets for more details

FLOOR CLEANING: Test each cleaner in a small area. If no ill effects are noted, you can continue to clean with the product and process tested.

RESTRICTIONS: Restrict the use of the floor to light traffic and non-harsh chemicals until the coating is fully cured (see technical data under full cure). It is best to let the floor remain dry for the full cure cycle.

NOTICE TO BUYER: DISCLAIMER OF WARRANTIES AND LIMITATIONS ON OUR LIABILITY

We warrant that our products are manufactured to strict quality assurance specifications and that the information supplied by us is accurate to the best of our knowledge. Such information supplied about our products is not a representation or a warranty. It is supplied on the condition that you shall make your own tests to determine the suitability of our product for your particular purpose. Listed physical properties are typical and should not be construed as specifications. **NO WARRANTY IS MADE, EXPRESSED OR IMPLIED, REGARDING SUCH OTHER INFORMATION, THE DATA ON WHICH IT IS BASED, OR THE RESULTS YOU WILL OBTAIN FROM ITS USE. N0 WARRANTY IS MADE, EXPRESSED OR IMPLIED, THAT OUR PRODUCT SHALL BE MERCHANTABLE OR THAT OUR PRODUCT SHALL BE FIT FOR ANY PARTICULAR PURPOSE. NO WARRANTY IS MADE THAT THE USE OF SUCH INFORMATION OR OUR PRODUCT WILL NOT INFRINGE UPON ANY PATENT.** We shall have no liability for incidental or consequential damages, direct or indirect. Our liability is limited to the net selling price of our product or the replacement of our product, at our option. Acceptance of delivery of our product means that you have accepted the terms of this warranty whether or not purchase orders or other documents state terms that vary from this warranty. No representative is authorized to make any representation or warranty or assume any other liability on our behalf with any sale of our products. Our products contain chemicals that may **CAUSE SERIOUS PHYSICAL INJURY. BEFORE USING, READ THE MATERIAL SAFETY DATA SHEET AND FOLLOW ALL PRECAUTIONS TO PREVENT BODILY HARM.**

Clean Air PRODUCTS

STRAIGHT-THRU
AIR SHOWERS

CAP701KD-ST

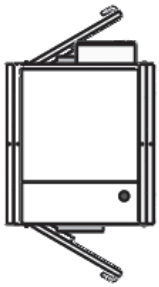

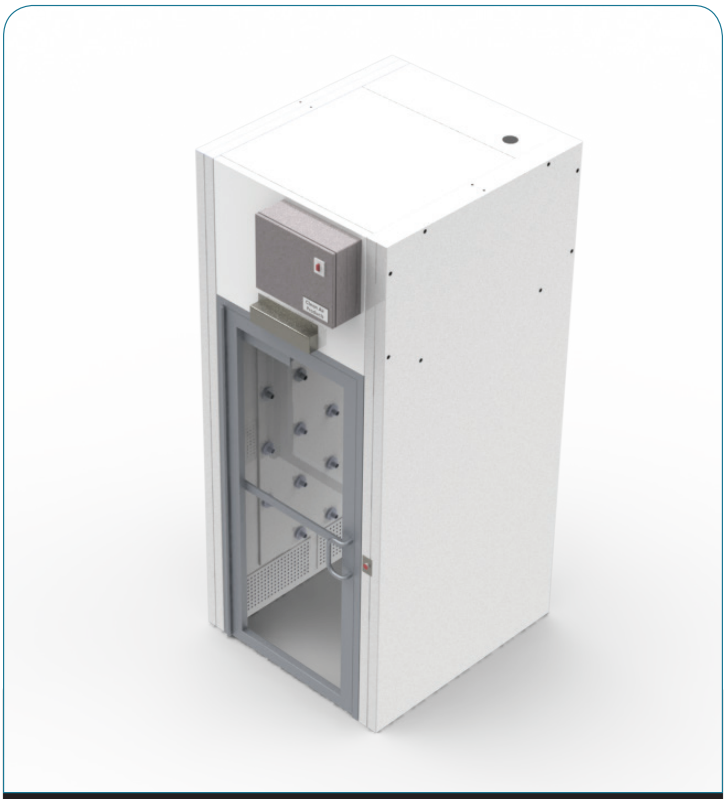

CAP701KD-ST

Quality construction
- Durable heavy-gauge painted steel
- High velocity and air volume rate for fast, efficient cleaning
- Inspection panels for high-pressure supply ducts

Easy electronics
- Microprocessor controller, touchscreen controls
- Magnetic interlocks
- LED lighting

Advanced filters and sealants
- Urethane sealant
- Standard-size HEPA filters and prefilters
- Zero-leak, negative-pressure reliability seal on HEPA filter gasket

Optimal configuration
- Easy service access
- Customization options

For a full description see the CAP air showers brochure.

CAP701KD-ST standard-profile straight-through air showers quickly and effectively remove particles that would otherwise be carried into your cleanroom.

CAP701KD air showers can be custom-designed and ordered in a variety of configurations, including 90-degree left or right turn; 3-door (multiple entrance and exit combinations); tunnel (straight-through with multiple sections); double doors; ADA compliant; decontamination; and wall mount. See separate data sheets.

Clean Air Products air showers feature rugged construction and adjustable, high velocity air jets. The 16-gauge painted steel shell (*stainless steel* optional) with heavy-duty glass door and door closer withstand the rigors of shipping, installation and daily use. Steel construction reduces the chances of biological growth and contamination.

A powerful 3-phase 5 HP blower motor provides approximately 1900 CFM at 7800 LFM. This high air-flow volume (power) combined with the high nozzle velocity (force) quickly and efficiently clean personnel inside the air shower.

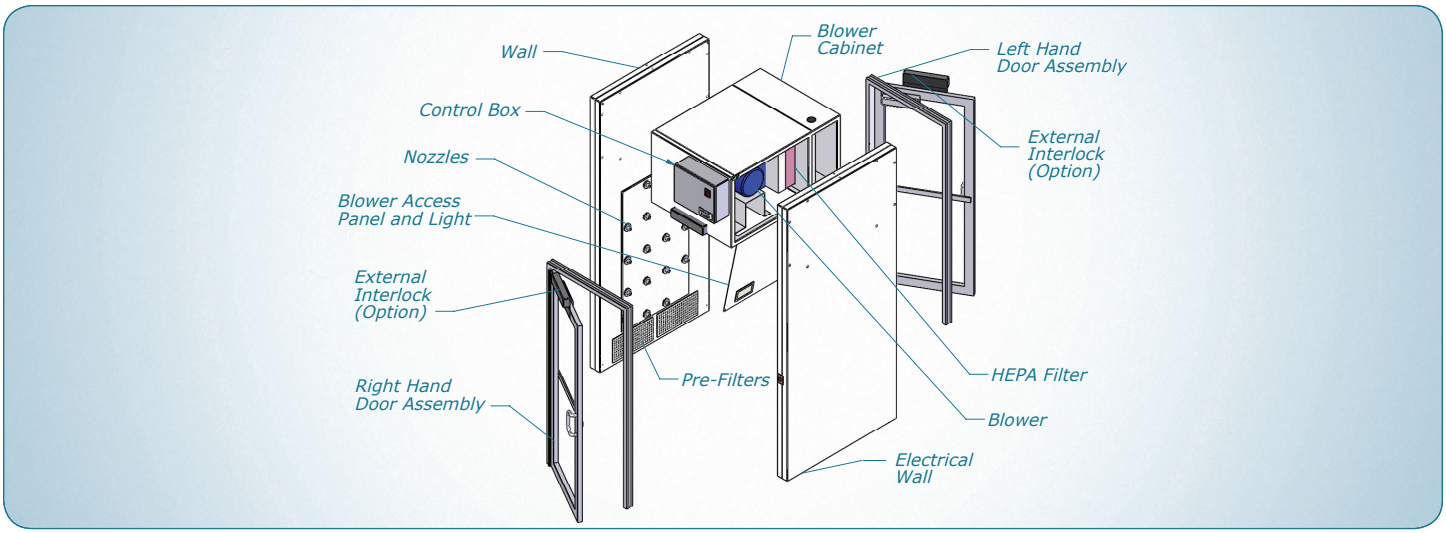

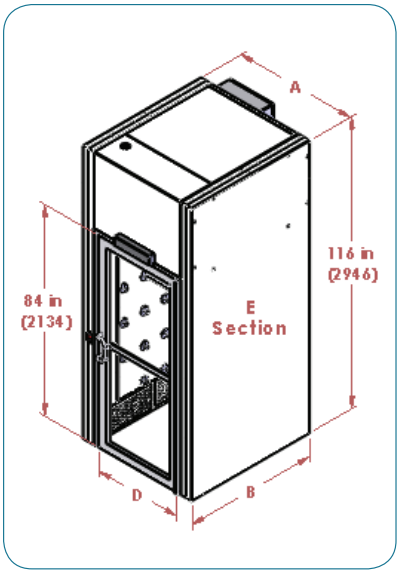

PRODUCT DIMENSIONS: inches (mm) (Common sizes — additional sizing available)					
Model Number	A Outside width	B Outside depth	D Door width	Qty of E 54 in. sections	Qty of E 72 in. sections
CAP701KD-ST-4954 * Quick Ship available	49.75 (1264)	54 (1372)	36 (914)	1	0
CAP701KD-ST-4972	49.75 (1264)	72 (1829)	36 (914)	0	1
CAP701KD-ST-5554	55.75 (1416)	54 (1372)	42 (1067)	1	0
CAP701KD-ST-5572	55.75 (1416)	72 (1829)	42 (1067)	0	1
CAP701KD-ST-6154	61.75 (1568)	54 (1372)	48 (1219)	1	0
CAP701KD-ST-6172	61.75 (1568)	72 (1829)	48 (1219)	0	1

LEARN MORE

Clean Air Products designs the CAP701 Series air showers for optimal performance, customization, configuration and maintenance. For more information on CAP701 Series air showers including CAD drawings, RFQs, purchase specifications, exploded views and options, visit:

www.cleanairproducts.com/product-category/air-showers

www.cleanairproducts.com
8605 Wyoming Ave. N. • Minneapolis, Minnesota 55445
763.425.9122 • 800.423.9728 • fax: 763.425.2004
e-mail: sales@cleanairproducts.com

© 2015 Clean Air Products. Specifications subject to change. Please contact factory for details.

CR Series

CR24™ 2' x 4' Architectural LED Troffer

Product Description

The CR24™ architectural LED troffer delivers up to 130 lumens per watt of exceptional 90 CRI light at 4000 lumens. This breakthrough performance is achieved by combining the high efficacy and high-quality light of Cree TrueWhite® Technology with a unique thermal management design. Its design makes the CR24 perfect for use in commercial new construction or renovated spaces. The CR24 product family is available in warm, neutral, cool, or daylight color temperatures and has step, 0-10V, or Lutron EcoSystem® Enabled dimming options.

Performance Summary

- Utilizes Cree TrueWhite® Technology (90 CRI)
- Room-Side Heat Sink
- **Efficacy:** 90-130 LPW
- **Initial Delivered Lumens:** 2,200, 3,100, 4,000, 5,000 lumens
- **Input Power:** 22-50 watts
- **CRI:** 90 CRI (Cree TrueWhite® Technology), 80+ CRI
- **CCT:** 3000K, 3500K, 4000K, 5000K
- **Input Voltage:** 120-277 VAC or 347 VAC*
- **Limited Warranty†:** 10 years
- **Limited Warranty Emergency Back Up (EB) Battery:** 1 Year Battery Back Up. Test regularly in accordance with local codes
- **Controls:** Step Level to 50%, 0-10V Dimming or Lutron EcoSystem Enabled to 5%[1]
- **Mounting:** Recessed*

† See http://lighting.cree.com/warranty for warranty terms
* Acceptable for use with standard 9/16 T-Bar or larger when installed per installation instructions. Consult factory for non-standard grid applications

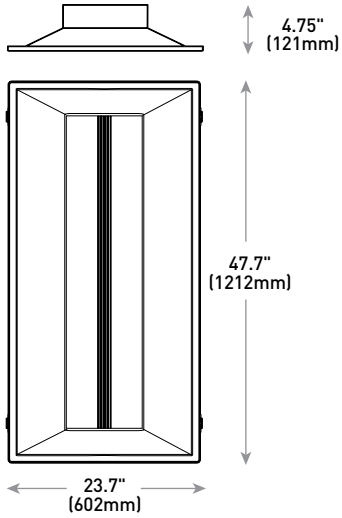

NOTE: Use of Expanded Junction Box will expand the depth to 6.67" and Emergency Backup will expand the depth to 6.30". Use of 347V will increase fixture height by 1.4"

Accessories

Field-Installed		
Adjustable Cable AC5 72 PD8 JB AC5 18/4 72 PD8 JB **Chicago Plenum Field Kit** CPLCR **Chicago Plenum Field Kit-Emergency** CPLCR EM	**Junction Box** EJBCR 5PK - Expanded size junction box for through wiring (5 pack) **Power Whip** PW 18/4 06 9T/SS CR	**347 Volt** CR 347V **Step Dimming to 50%** CR 347V SD **Surface Mount Kit** SMK CR24

Ordering Information

Example: CR24-40L-40K-10V

CR24					
Product	**Initial Delivered Lumens**	**CCT**	**Voltage**	**Control**	**Options**
CR24	**22L**[1] 22W, 2200 lumens – 100 LPW - Only available in 35K or 40K options **31L**[1] 34W 3100 lumens – 90 LPW **40L** 40W 4000 lumens – 100 LPW **40LHE**[1] 30.5W 4000 lumens – 130 LPW (30K) 32W 4000 lumens – 125 LPW (35K) 33W 4000 lumens – 120 LPW (40K) 34.5W 4000 lumens – 115 LPW (50K) **50L**[2] 50W 5000 lumens – 100 LPW	**30K** 3000K **35K** 3500K **40K** 4000K **50K** 5000K	**Blank** 120-277 Volt **34V** 347 Volt - Integrated option available on 40L only. Other types require addition of a 347 accessory kit (see table above)	**S** Step Dimming to 50% **10V** 0-10V Dimming to 5% **LES**[3] Lutron EcoSystem® Enabled to 5%	**HD** **CRI 80+ (44W 4000 lumens - 90 LPW)** - Available only with 40L **EB14**[4,5] **Emergency Backup - 1400 lumens** - Not for use with SMK Kits. Use EB14SMK **EB14SMK**[4,5] **Emergency Backup with surface mount kit - 1400 lumens** - Includes surface mount kit accessory (SMK-CR14)

1. Not available with HD 2. Not available with HD, EB14, EB14SMK 3. Not available in the following options: 22L: 30K or 50K; 31L: All Colors; 40LHE: All Colors 4. Not available in 50L 5. Not available in LES types except 40L LES type
NOTE: Price adder may apply depending on configuration

Rev. Date: V4B 12/22/2016

US: www.cree.com T (800) 236-6800 F (262) 504-5415

Canada: www.cree.com/canada T (800) 473-1234 F (800) 890-7507

Product Specifications

CREE TRUEWHITE® TECHNOLOGY

A revolutionary way to generate high-quality white light, Cree TrueWhite® Technology is a patented approach that delivers an exclusive combination of 90+ CRI, beautiful light characteristics, and lifelong color consistency, all while maintaining high luminous efficacy – a true no compromise solution

CREE LED TECHNOLOGY

Cree's total systems approach to product development is a comprehensive engineering philosophy that combines the most advanced LED sources, driver technologies, optics and forms. The result is highly-reliable luminaire solutions for both indoor and outdoor applications that reduce energy use, extend lifetimes, and maximize illumination performance and quality.

ROOM-SIDE HEAT SINK

An innovative thermal management system designed to maximize cooling effectiveness by integrating a unique room-side heat sink into the diffusing lens. This breakthrough design creates a pleasing architectural aesthetic while conducting heat away from LEDs in a temperature-controlled environment. This enables the LEDs to consistently run cooler, providing significant boosts to lifetime, efficacy, and color consistency.

CONSTRUCTION & MATERIALS

- Durable 22-gauge steel housing with standard troffer access plate for electrical installation
- One-piece lower reflector finished with a textured high reflectance white polyester powder coating creates a comfortable visual transition from the lens to the ceiling plane
- Includes t-bar clips and holes for mounting support wires enable recessed or suspended installation
- Individual luminaires may be mounted end to end for a continuous row of illumination

OPTICAL SYSTEM

- Unique combination of reflective and refractive optical components achieves a uniform, comfortable appearance while eliminating pixelation and color fringing
- Components work together to optimize distribution, balancing the delivery of high illuminance levels on horizontal surfaces with an ideal amount of light on walls and vertical surfaces. This increases the perception of spaciousness
- Diffusing lens integrated with upward-facing LED strip eliminates direct view of LEDs while lower reflector balances brightness of lens with the ceiling to create a low-glare high angle appearance

ELECTRICAL SYSTEM

- Integral, high-efficiency driver
- **Power Factor:** = 0.9 nominal
- **Input Power:** Stays constant over life
- **Input Voltage:** 120-277V or 347V, 50/60Hz
- **Operating Temperature Range:** 0˚C - + 35˚C (32˚F - + 95˚F)
- **Total Harmonic Distortion:** < 20%

CONTROLS

- Step dimming to 50%*
- Continuous dimming to 5% with 0-10V DC control protocol*
- Lutron EcoSystem® Enabled option allows seamless integration with Lutron EcoSystem controls
- Reference www.creelink.com/exLink.asp?7098214OZ58R34I26620963 for recommended dimming controls and wiring diagrams

REGULATORY & VOLUNTARY QUALIFICATIONS

- cULus Listed
- Suitable for damp locations
- Designed for indoor use
- UL924 (EB14 option)
- DLC qualified. Please refer to www.designlights.org/QPL for most current information
- RoHS compliant. Consult factory for additional details
- Meets FCC Part 15 standards for conducted and radiated emissions

Recommended CR Series Lumen Maintenance Factors (LMF)[1]

Ambient	Initial Delivered Lumens	Initial LMF	25K hr Projected[2] LMF	50K hr Projected[2] LMF	75K hr Calculated[3] LMF	100K hr Calculated[3] LMF
0˚C (41˚F)	22L, 31L, 40L, and 50L	1.05	1.04	1.04	1.04	1.04
	40LHE	1.05	1.01	0.98	0.96	0.94
5˚C (41˚F)	22L, 31L, 40L, and 50L	1.04	1.03	1.03	1.03	1.03
	40LHE	1.04	1.00	0.97	0.95	0.93
10˚C (50˚F)	22L, 31L, 40L, and 50L	1.03	1.02	1.02	1.02	1.02
	40LHE	1.03	0.99	0.96	0.94	0.92
15˚C (59˚F)	22L, 31L, 40L, and 50L	1.02	1.01	1.01	1.01	1.01
	40LHE	1.02	0.98	0.95	0.93	0.91
20˚C (68˚F)	22L, 31L, 40L, and 50L	1.01	1.00	1.00	1.00	1.00
	40LHE	1.01	0.97	0.95	0.92	0.90
25˚C (77˚F)	22L, 31L, 40L, and 50L	1.00	0.99	0.99	0.99	0.99
	40LHE	1.00	0.96	0.94	0.91	0.89
30˚C (86˚F)	22L, 31L, 40L, and 50L	0.99	0.98	0.98	0.98	0.98
	40LHE	0.99	0.95	0.93	0.91	0.89
35˚C (95˚F)	22L, 31L, 40L, and 50L	0.98	0.97	0.97	0.97	0.97
	40LHE	0.98	0.94	0.92	0.90	0.88
40˚C (104˚F)	22L, 31L, 40L, and 50L	0.97	0.96	0.96	0.96	0.96
	40LHE	0.97	0.93	0.91	0.89	0.87

[1] Lumen maintenance values at 25˚C (77˚F) are calculated per TM-21 based on LM-80 data and in-situ luminaire testing
[2] In accordance with IESNA TM-21-11, Projected Values represent interpolated value based on time durations that are within six times (6X) the IESNA LM-80-08 total test duration (in hours) for the device under testing ([DUT] i.e. the packaged LED chip)
[3] In accordance with IESNA TM-21-11, Calculated Values represent time durations that exceed six times (6X) the IESNA LM-80-08 total test duration (in hours) for the device under testing ([DUT] i.e. the packaged LED chip)

Photometry

CR24-40L-30K BASED ON LTL REPORT TEST #: 24421
Luminaire photometry has been conducted by a NVLAP accredited testing laboratory in accordance with IESNA LM-79-08. IESNA LM-79-08 specifies the entire luminaire as the source resulting in a luminaire efficiency of 100%.

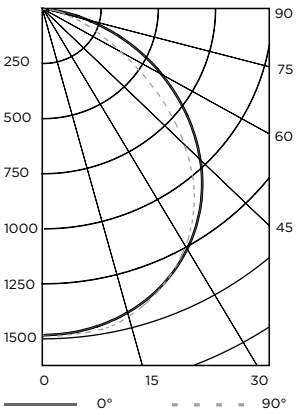

Coefficients Of Utilization – Zonal Cavity Method				
RC %:	80			
RW %:	70	50	30	10
RCR: 0	119	119	119	119
1	109	105	101	97
2	100	92	85	79
3	91	80	72	66
4	83	71	63	56
5	76	64	55	48
6	71	57	48	42
7	65	52	43	37
8	61	47	39	33
9	57	43	35	30
10	53	40	32	27

Effective Floor Cavity Reflectance: 20%

Reference http://lighting.cree.com/products/indoor/troffers/cr-series for detailed photometric data

Average Luminance Table (cd/m²)				
	Horizontal Angle			
Vertical Angle		0°	45°	90°
	45°	1,976	2,116	2,152
	55°	1,807	2,018	2,074
	65°	1,553	1,889	1,879
	75°	1,149	2,348	1,119
	85°	424	62	62

Zonal Lumen Summary			
Zone	Lumens	% Lamp	Luminaire
0-30	1,115	27.9%	27.9%
0-40	1,835	45.9%	45.9%
0-60	3,245	81.1%	81.1%
0-90	4,000	100%	100%
0-180	4,000	100%	100%

Application Reference

Based on CR22-40L-30K Luminaire

Open Space						
Spacing	Initial Delivered Lumens	Lumens	Wattage	LPW	w/ft²	Average fc
8 x 8	22L	2200	22	100	0.35	30
	40L	4000	40	100	0.69	54
	40LHE	4000	30.5	125	0.56	54
	50L	5000	50	100	0.78	68
8 x 10	22L	2200	22	100	0.28	25
	40L	4000	40	100	0.55	45
	40LHE	4000	30.5	125	0.45	45
	50L	5000	50	100	0.62	57
10 x 10	22L	2200	22	100	0.22	21
	40L	4000	40	100	0.44	38
	40LHE	4000	30.5	125	0.36	38
	50L	5000	50	100	0.50	48
10 x 12	22L	2200	22	100	0.19	17
	40L	4000	40	100	0.37	30
	40LHE	4000	30.5	125	0.30	30
	50L	5000	50	100	0.42	38

9' ceiling: 80/50/20 reflectances; 2.5' workplane, open room. LLF: 1.0 Initial Open Space: 50' x 40' x 10'

© 2016 Cree, Inc. and/or one of its subsidiaries. All rights reserved. For informational purposes only. Content is subject to change. Patent www.cree.com/patents. Cree®, TrueWhite®, SmartCast®, and Cree TrueWhite® are registered trademarks, and the Cree logo, the Cree TrueWhite Technology logo, and CR24™ are trademarks of Cree, Inc. The UL logo is a registered trademark of UL LLC. Lutron®, Lutron EcoSystem®, EcoSystem®, and the Lutron EcoSystem Enabled logo are registered trademarks of Lutron, Inc. The DLC QPL logo is a registered trademark of Northeast Energy Efficiency Partnerships, Inc.

US: www.cree.com T (800) 236-6800 F (262) 504-5415 **Canada: www.cree.com/canada** T (800) 473-1234 F (800) 890-7507

Visual Interior Tool™

File Help Tools

Settings

Units: Feet - Footcandles

Room Dimensions

Length [X]	82	ft
Width [Y]	37	ft
Height [Z]	9	ft
Workplane	2.5	ft
Ceiling Type	2x4	

Room Reflectances

Ceiling	80	%
Walls	50	%
Floor	20	%

Criteria

Illuminance		fc
Power Density		W/ft²
Quantity		

Constraints

Spacing X [SC=8.7]	8	ft
Spacing Y [SC=8.2]	8	ft
Rows	5	
Columns		

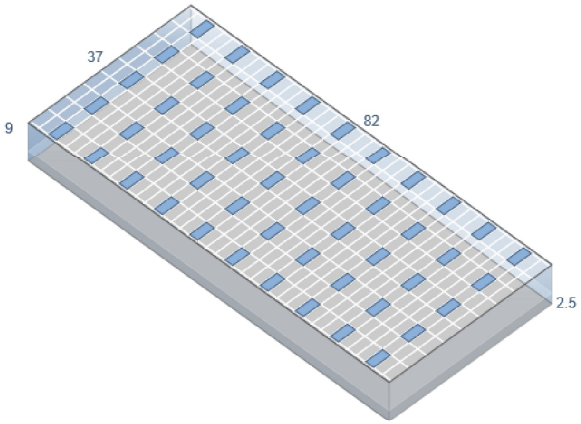

Calculation Results [A]

Illuminance	68 fc
Power Density	0.83 W/ft²
Quantity	50

Spacing Results [A]

Spacing	8 x 8 ft
Arrangement	10 x 5
Outside Spacing X	4.11 ft
Outside Spacing Y	0.59 ft

Display

Dimensions Room ☑ Layout ☐

Show Zonal Cavity Info [+]

Project Information

A

No Photo Available

Cree LED Lighting Solutions, Inc.

[A] - CR24-50L-35K-S

Light Loss Factor	0.8	Symbol Shape	Rectangular	Lamp Quantity	1
Suspension Length	0	Symbol Length	1.79	Lumens Per Lamp	5089
Orientation	0	Symbol Width	3.81	Wattage	50.3

Copyright 2011-2018, Acuity Brands Lighting, Inc. Visual Interior Tool version: 2.0.3.1. Results generated by this tool are provided for informational purposes only, without any warranty as to accuracy, completeness, reliability or otherwise. The calculated results may be dependent on user provided data or data provided from publicly available sources, and do not take into account all factors and circumstances. The Visual Support Center is available at support@visual-3D.com